Rammer® E06

EXCELLENCE LINE
COMPACT HAMMER RANGE



EXTREMELY GOOD POWER-WEIGHT RATIO

POWER OF RAMMER IN COMPACT SIZE

Rammer's world-renowned Excellence line is completed by the Compact range, delivering versatile and reliable performance across a wide range of applications.



APPLICATIONS

Excavation	Building Construction
Special	Demolition

MAIN FEATURES AND BENEFITS

THE MOST EFFICIENT OPERATIONS:

- CBE enables plug-and-play installation
- High uptime and easy maintenance based on membrane accumulator
- Auto-Greasing with hose-free installation
- High efficiency and performance for compact power-to-weight ratio
- Multiple body wear protection shield options for any job site.

LONG LIFETIME AND SUITABILITY FOR DIFFERENT APPLICATIONS:

- Durability based on the highest quality materials and cast body protection by optional wear plates
- Modular body design structure enables versatile use through the whole lifecycle

Rammer E06

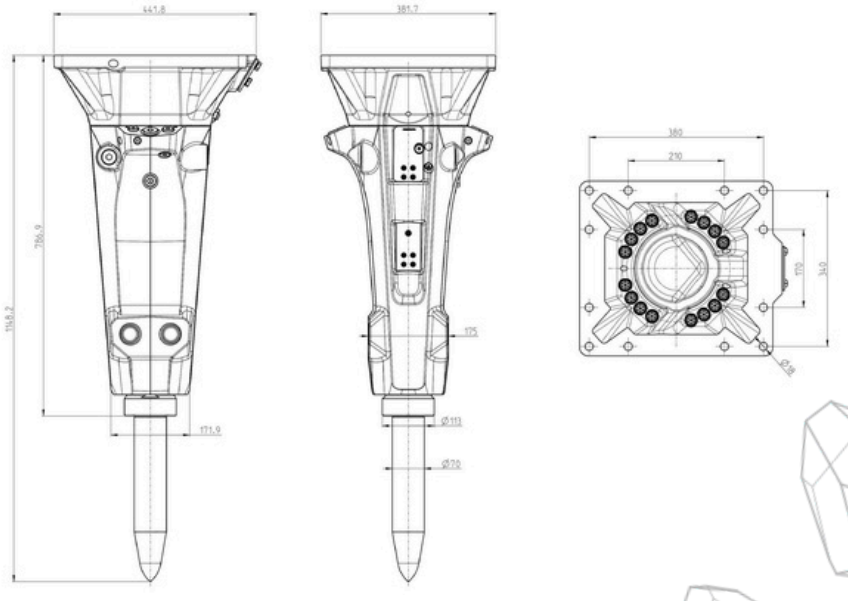

Specifications

Excavator weight	3-8 t (6613-17636 lb)
Working weight	260 kg (573 lb)
Pressure in LP-circuit	31-33 bar (450-478 psi)
Tool diameter	70 mm (2.75 in)
Impact rate	400-1700 bpm
Operating pressure	100...150 bar (1450...2175 psi)
Oil flow range	35...90 l/min (9...23 gal/min)
Back pressure, max	20 bar (290 psi)
Input power	22.5 kW (30 hp)

Developed and tested in the harshest of conditions, the foundations of Rammer products are quality, operational reliability and maximized productivity. Long working life and durability ensure our attachments can be used efficiently and economically no matter the challenge at hand, making Rammer a sustainable choice.

Sydney
Ground Tec Equipment
16 Garema Cct, Kingsgrove NSW 2208

Newcastle
Ground Tec Equipment
27 Jura St, Heatherbrae NSW 2324

Contact : 02 9642 2030 / breakers@groundtec.com.au